User manual
Tumble dryer

TD7–8, TD7–8LAC

Type N1...

Electrolux PROFESSIONAL

Original instructions

438942010/GB, IE
2026.10.16

Contents

1 Safety Precautions 5
1.1 Additional safety precautions for gas heated tumble dryer 7
1.2 General information 7
1.3 Commercial use only 7
1.4 Copyright 7
1.5 Ergonomics certification 7
1.6 Symbols 8
2 Warranty terms and exclusions 9
3 Energy saving hints and tips 10
3.1 Before drying 10
3.2 Energy consumption 10
4 Handling 11
4.1 Load 11
4.2 How to start the machine 13
4.2.1 Select program and option 13
4.2.1.1 Programs 14
4.2.2 Programs for lagoon 17
4.2.3 Options 18
4.2.4 Coin operated machines 19
4.3 When program has ended 19
4.3.1 Clean the filter 19
4.3.2 Clean the second filter — Only for machines with heat pump 20
5 Error codes 21
6 Maintenance 22
6.1 General 22
6.2 Time for maintenance 22
6.3 Every day 22
6.4 Machines with moisture measurement (RMC) 23
6.5 Machines with heat pump 24
6.5.1 Second lint filter 24
6.5.1.1 To clean the second filter 24
7 Disposal information 25
7.1 Appliance recyclability and disposal 25
7.1.1 Recyclability 25
7.1.2 Procedure regarding appliance disposal and component / material recovery 25
7.2 Disposal of packing 25

The manufacturer reserves the right to make changes to design and component specifications.

1 Safety Precautions

- Servicing shall be carried out only by authorized personnel.
- Only authorized spare parts, accessories and consumables shall be used.
- The machine is not to be used if industrial chemicals have been used for cleaning.
- Do not dry unwashed items in the machine.
- WARNING: Items that have been soiled with substances such as hair care products, cooking oil, acetone, alcohol, petrol, kerosene, spot removers, turpentine, waxes and wax removers shall be cleaned sufficiently to remove the contaminant before being tumble dried. When washing such soiled items ensure the use of detergent as specified by the detergent manufacturer and select the highest suitable temperature. If in doubt, wash the items several times.
- Items such as foam rubber (latex foam), shower caps, waterproof textiles, rubber backed articles and clothes or pillows fitted with foam rubber pads should not be dried in the machine.
- Fabric softeners or similar products should be used as specified by the fabric softener instructions.
- The final part of a drying cycle occurs without heat (cool down cycle) to ensure that the items are left at a temperature that ensures that the items will not be damaged.
- Remove all objects from pockets such as lighters and matches.
- WARNING. Never stop the machine before the end of the drying cycle unless all items are quickly removed and spread out so that the heat is dissipated.
- Adequate ventilation has to be provided to avoid the back flow of gases into the room for appliances burning other fuels, including open fires.
- Exhaust air must not be discharged into a flue which is used for exhausting fumes from appliances burning gas or other fuels.
- The machine must not be installed behind a lockable door, a sliding door or a door with a hinge on the opposite side to that of the machine in such a way that a full opening of the machine is restricted.
- If the machine has a lint trap this has to be cleaned frequently.
- The lint must not be accumulated around the machine.
- DO NOT MODIFY THIS APPLIANCE.
- When performing service or replacing parts, the power must be disconnected.
- When the power is disconnected, the operator must see that the machine is disconnected (that the plug is removed and remains removed) from any point to which he has access. If this is not possible, due to the construction or installation of the machine, a disconnection with a locking system in the isolated position shall be provided.
- In accordance with the wiring rules: mount a multi-pole switch prior to the machine to facilitate installation and service operations.
- WARNING: The appliance must not be supplied through an external switching device, such as a timer, or connected to a circuit that is regularly switched on and off by a utility.
- If different rated voltages or different rated frequencies (separated by a /) are stated at the machine data plate, instructions for adjusting the appliance for operation at the required rated voltage or rated frequency are stated in the installation manual.
- Stationary appliances not fitted with means for disconnection from the supply mains having a contact separation in all poles that provide full disconnection under

overvoltage category III, means for disconnection must be incorporated in the fixed wiring in accordance with the wiring rules.

- The openings in the base, shall not be obstructed by a carpet.
- Oil-affected items can ignite spontaneously, especially when exposed to heat sources such as in a tumble dryer. The items become warm, causing an oxidation reaction in the oil. Oxidation creates heat. If the heat cannot escape, the items can become hot enough to catch fire. Piling, stacking or storing oil-affected items can prevent heat from escaping and so create a fire hazard.
- Maximum mass of dry cloth: 8.0 kg (for gas heated tumble dryers).
- Maximum mass of dry cloth: 9.0 kg (for heat pump and electric heated tumble dryers).
- A-weighted emission sound pressure level at working stations: 70 dB(A).
- The tumble dryer can be placed on top of a washer extractor or another tumble dryer (WP7–6, WP7–7, WP7–8, TD7–8).
- Additional requirements for the following countries; AT, BE, BG, HR, CY, CZ, DK, EE, FI, FR, DE, GR, HU, IS, IE, IT, LV, LT, LU, MT, NL, NO, PL, PT, RO, SK, SI, ES, SE, CH, TR, UK:
  - The appliance can be used in public areas.
  - This appliance can be used by children aged from 8 years and above and persons with reduced physical, sensory or mental capabilities or lack of experience and knowledge if they have been given supervision or instruction concerning use of the appliance in a safe way and understand the hazards involved. Children shall not play with the appliance. Cleaning and user maintenance shall not be made by children without supervision.
  - Children of less than 3 years should be kept away unless continuously supervised.
- Additional requirements for other countries:
  - This appliance is not intended for use by persons (including children) with reduced physical, sensory or mental capabilities, or lack of experience and knowledge, unless they have been given supervision or instruction concerning use of the appliance by a person responsible for their safety. Children should be supervised to ensure that they do not play with the appliance.

1.1 Additional safety precautions for gas heated tumble dryer

- Before installation, check that the local distribution conditions, nature of gas and pressure and the adjustment of the appliance are compatible.
- The machine is not to be installed in rooms containing cleaning machines with perchloroethylene, TRICHLOROETHYLENE or CHLOROFLUOROCONTAINING HYDROCARBONS as cleaning agents.
- NOTE: it is pointed out that the connection and commissioning of appliances complying with this standard are subject to observance of the installation regulations in force in the countries where these appliances are marketed.
- Connection to the appliance shall be made with a flexible hose suitable for the appliance category in accordance with national installation regulations of the country of destination and that in case of doubt the installer shall contact the supplier.
- The appliance should be installed on non-flammable materials for the floor, worktop and/or wall close to the appliance if required.
- If you can smell gas:
  - Do not switch on any equipment
  - Do not use electrical switches
  - Do not use telephones in the building
  - Evacuate the room, building or area
  - Contact the person responsible for the machine

1.2 General information

Conditions for storage and transportation of the appliance should fulfil a temperature between -20°C / + 70°C and max Humidity of 95% RH.

In order to prevent damage to the electronics (and other parts) that may occur as the result of condensation, the machine should be placed in room temperature for 24 hours before being used for the first time.

Electric power supply should follow:

- Max range for each country rated voltage: -15% / +10%.
- Max range for each country rated frequency: ± 3 Hz.
- Dips/Interruption: 5 Dips/day (100% voltage lost, with 3-4 minutes duration).

A stable power supply is always the best. Fluctuations gives stress and additional load on all electric and electronic components.

1.3 Commercial use only

The machine/machines covered by this manual is/are made for commercial and industrial use only.

1.4 Copyright

This manual is intended solely for consultation by the operator and can only be given to third parties with the permission of Electrolux Professional AB company.

1.5 Ergonomics certification

The human body is designed for movement and activity but physical stress injuries as a result of static and repetitive movements or unfavorable working postures may occur.

The ergonomic features of your product, the ones which may influence your physical and cognitive interaction with it, have been assessed and certified.

A product which exhibits ergonomic features, in fact, shall fulfil specific ergonomic requirements, belonging to three different areas: Polytechnic, Biomedical and Psychosocial (usability and satisfaction).

For each of these areas, specific tests with real users have been performed. The product was therefore compliant with the ergonomic acceptability criteria requested by the standards.

In case several machines are managed by the same operator the repetitive movements will increase and as a consequence of this the related biomechanical risk will increase exponentially.

The possible postural risks are the interaction with the door handle both in case the machine is placed directly on the floor without a base and in case the machine is placed on top of a washing machine.

Follow the below recommendations to avoid, as much as possible, operators acquiring bodily injury.

- Place the machine on a base instead of directly on the floor so that the operator does not need to bend his/her back unnecessarily when loading and unloading.
  Minimum suggested height of bases is 300 mm.
- Move the control panel to the lower position in case the machine is placed on top of a washing machine.
- Make sure there are suitable trolleys or baskets for loading, unloading and transportation.
- Organize job rotation in the working place in the case several machines are managed by the same operator.

1.6 Symbols

	Caution
	Caution, hot surface
	Caution, high voltage
	Warning, risk of fire / flammable material
	Danger, crush hazard
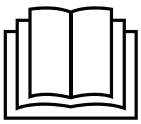	Read the instructions before using the machine

2 Warranty terms and exclusions

If the purchase of this product includes warranty coverage, warranty is provided in line with local regulations and subject to the product being installed and used for the purposes as designed, and as described within the appropriate equipment documentation.

Warranty will be applicable where the customer has used only genuine spare parts and has performed maintenance in accordance with Electrolux Professional AB user and maintenance documentation made available in paper or electronic format.

Electrolux Professional AB strongly recommends using Electrolux Professional AB approved cleaning, rinse and descaling agents to obtain optimal results and maintain product efficiency over time.

The Electrolux Professional AB warranty does not cover:

- service trips cost to deliver and pick up the product;
- installation;
- training on how to use/operate;
- replacement (and/or supply) of wear and tear parts unless resulting from defects in materials or workmanship reported within one (1) week from the failure;
- correction of external wiring;
- correction of unauthorized repairs as well as any damages, failures and inefficiencies caused by and/or resulting from;
  - insufficient and/or abnormal capacity of the electrical systems (current/voltage/frequency, including spikes and/or outages);
  - inadequate or interrupted water supply, steam, air, gas (including impurities and/or other that does not comply with the technical requirements for each appliance);
  - plumbing parts, components or consumable cleaning products that are not approved by the manufacturer;
  - customer’s negligence, misuse, abuse and/or non-compliance with the use and care instructions detailed within the appropriate equipment documentation;
  - improper or poor: installation, repair, maintenance (including tampering, modifications and repairs carried out by third parties not authorized third parties) and modification of safety systems;
  - Use of non-original components (e.g.: consumables, wear and tear, or spare parts);
  - environment conditions provoking thermal (e.g. overheating/freezing) or chemical (e.g. corrosion/oxidation) stress;
  - foreign objects placed in- or connected to- the product;
  - accidents or force majeure;
  - transportation and handling, including scratches, dents, chips, and/or other damage to the finish of the product, unless such damage results from defects in materials or workmanship and is reported within one (1) week of delivery unless otherwise agreed;
- product with original serial numbers that have been removed, altered or cannot be readily determined;
- replacement of light bulbs, filters or any consumable parts;
- any accessories and software not approved or specified by Electrolux Professional AB.

Warranty does not include scheduled maintenance activities (including the parts required for it) or the supply of cleaning agents unless specifically covered within any local agreement, subject to local terms and conditions.

Check on Electrolux Professional AB website the list of authorized customer care.

3 Energy saving hints and tips

3.1 Before drying

- Spin the textiles in the washer extractor at the highest spin speed suitable for the textile type before placing it in the tumble dryer. The lower the remaining moisture content of the textiles, the shorter the drying time and the lower the energy consumption.
- Sort textiles by fabric type, thickness and garment size whenever possible. Drying similar items together improves drying uniformity and can reduce unnecessary drying time.
- Use the correct amount of detergent during washing. Excess detergent may leave residues on the textiles and contribute to build-up on the lifters, filters and air passages, reducing drying performance and increasing energy consumption.

3.2 Energy consumption

- For the best energy efficiency, load the tumble dryer close to the recommended load for the selected program. Do not exceed the maximum load capacity, as excessive loading can increase drying time and reduce drying performance.
- Select the ECO program whenever available. ECO programs are designed to minimise energy consumption while still achieving the intended drying result.
- Clean the lint filter(s) after each drying cycle, or as instructed in this manual. Clean filters ensure unrestricted airflow, shorter drying times and optimal energy performance.
- To maintain optimal energy performance throughout the product lifetime, keep the dryer's airflow system clean and unobstructed. Regularly remove lint and debris from air paths, internal airflow components, air inlets and air outlets as described in this manual. **Cleaning of internal airflow components that are not accessible to the user shall be carried out by a qualified service technician.**
- For exhaust tumble dryers, the exhaust duct and air outlet should be cleaned regularly to maintain optimal airflow, drying performance and energy efficiency. **Cleaning of exhaust ducts or components requiring disassembly shall be performed by a qualified service technician.**
- Install the tumble dryer according to the installation instructions. Correct installation is essential for achieving optimal drying performance and energy efficiency. **Installation and adjustment work shall be carried out by a qualified and authorised service technician where required by local regulations.**
- Remove the textiles soon after the program has finished. This minimises operation of the anti-crease function and avoids unnecessary energy consumption.

4 Handling

4.1 Load

Note!
Remove all objects from pockets and make sure there are no metal objects such as screws, pins etc. left. Metal objects might cause damage to the drum.

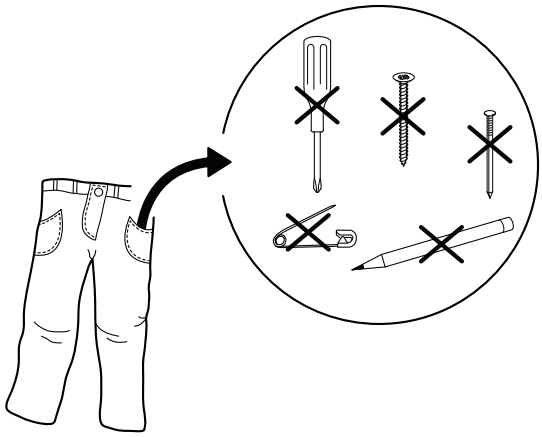

fig.X04827B

Make sure the filter is clean.

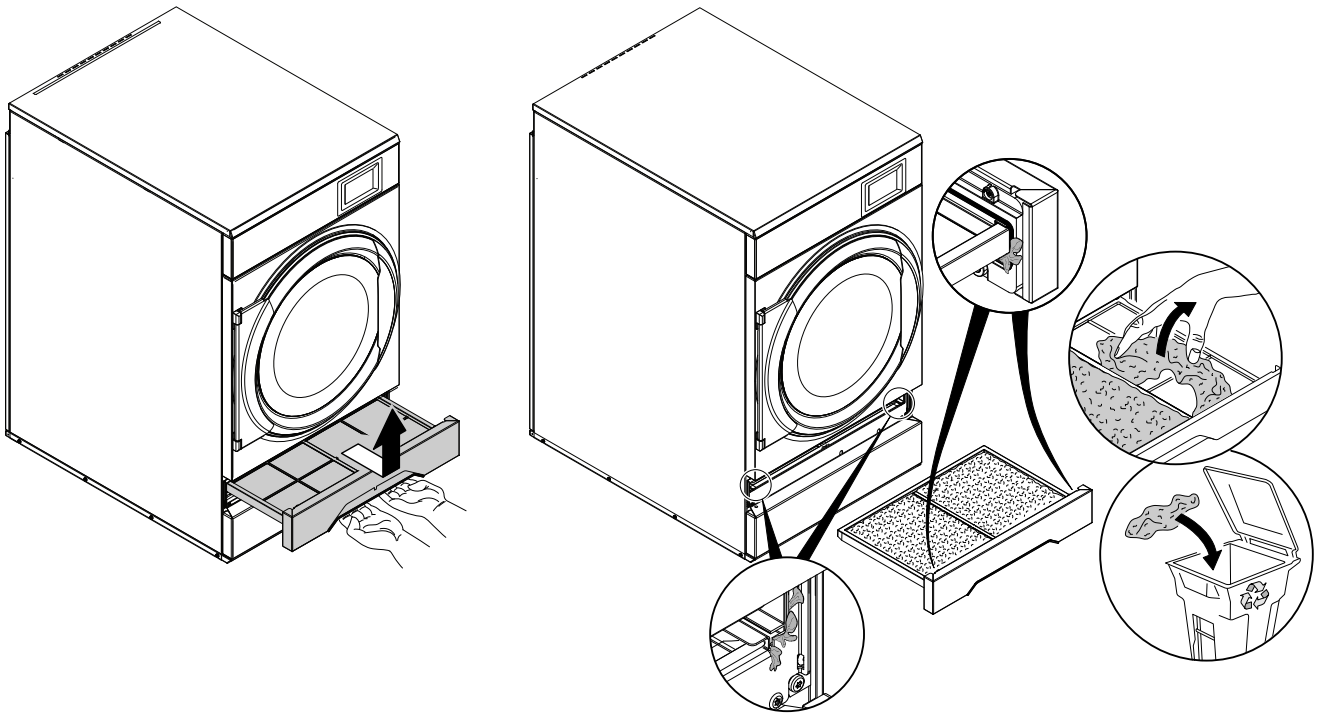

fig.X04523

Load the goods into the machine and close the door.
The recommended maximum load is 7.5 kg.

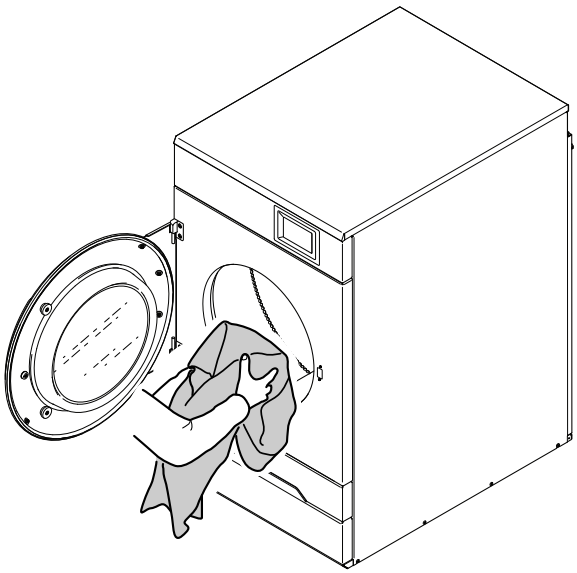

fig.X04535

4.2 How to start the machine

4.2.1 Select program and option

Select a program from the list.

Depending on machine set up the programs can be displayed in different ways. The following illustrations show some examples.

Press the Information icon ⓘ next to the program icon to get more information about that program.

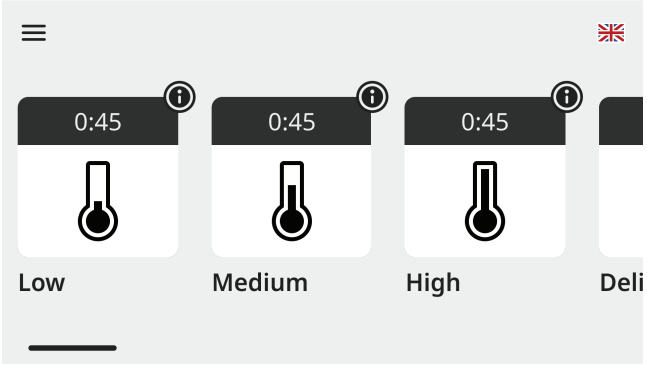

fig.X04959A

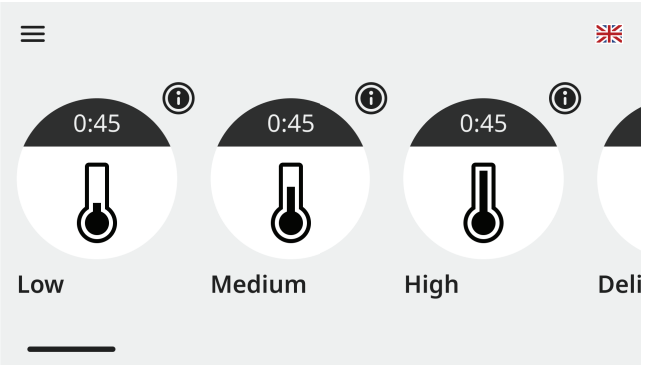

fig.X04959

In the list view, you can quickly see the main parameters of the program, such as the calculated program duration.

When a program is selected, a start screen is displayed. The appearance of this screen depends on the selections made in the installation wizard and the settings menu.

- Before program start
  The program duration is displayed either as the estimated cycle time or as the estimated cycle time together with the expected completion time, depending on the intended application and the market requirements.
- After program start
  The program duration is displayed as the estimated cycle time remaining until program completion and is continuously updated based on the actual program process.
- It is possible to set a delayed start, depending on the intended application and market requirements.
  – Tap the date/time field and select the desired finish time. Confirm by pressing the start button.
  – The start button will blink until the program begins.
  – If the door is opened before the program starts, the delayed start function will be cancelled. To start the program before the delayed start activates, tap Start again.

4.2.1.1 Programs

The machine is equipped with a number of programs adapted to the range of use to which the machine is intended — different markets use different programs. The following program description is a short description of some examples of programs that can be used.

Note!

For the best drying results, dry garments of the same fabric type together in each drying cycle.

There are two types of programs, automatic programs and time programs.

- Automatic programs has moisture detection and will stop when selected dryness is achieved.
- Time programs has no moisture detection and will stop when the preset or selected time has ended.

The listed options in the following table are the pre-selected options. The pre-selected options can however be changed before start.

Automatic programs

Program name	Explanation	Option
Normal Auto	Normal temperature. Stops automatically when clothes are extra dry. For fabrics that handle normal to high heat, such as cotton, denim and terry.	Extra dry
Low Auto	Low temperature. Stops automatically when clothes are extra dry. For delicate and synthetic fabrics like polyester, viscose and poly cotton.	Extra dry
Normal ECO Auto	Normal temperature. Energy-saving cycle; may influence drying time. Stops when clothes are extra dry. For normal- to high-heat fabrics, like cotton, denim and terry.	Extra dry
Low ECO Auto	Low temperature. Energy-saving cycle; may influence drying time. Stops when clothes are extra dry. For delicate fabrics like polyester, viscose and poly cotton.	Extra dry
Large items Auto	Normal temperature. Stops automatically when fabric is dry. For large items like sheets, tablecloths and curtains. Prevents tangling. For normal to high heat fabrics.	Normal
Large items Auto	Low temperature. Stops automatically when fabric is dry. For large items like sheets, tablecloths and curtains. Prevents tangling. For delicate and synthetic fabrics.	
Small load Auto	Normal temperature. Stops when fabric is dry. For small loads. For fabrics that handle normal to high heat.	Normal
Small load Auto	Low temperature. Stops when fabric is dry. For small loads. For delicate and synthetic fabrics.	
Sensitive Auto	Low temperature. Suitable for delicate fabrics and man-made fibers like polyester and polyamide, as well as natural fibres such as silk.	
Mops Auto	Low temperature. Stops when mops are dry. Suitable for synthetic microfiber mops.	
Cloths Auto	Low temperature. Stops when cloths are dry. Suitable for synthetic microfiber cloths.	
Disinfection Auto	Stops when disinfection is complete. For electric or gas dryers only. • Max half load. • Do not stop early. • Ensure load is dry and not tangled. • First use wash disinfection program!	

Time programs

Program name	Explanation
Normal Time	Normal temperature. Set drying time manually; stops when time ends. For fabrics that handle normal to high heat, such as cotton, denim and terry.
Low Time	Low temperature. Set drying time manually; stops when time ends. For delicate and synthetic fabrics like polyester, viscose and poly cotton, and “tumble dry low”.
Normal ECO Time	Normal temperature. Energy-saving cycle; may require longer drying time. Stops when time ends. For delicate fabrics like polyester, viscose, poly cotton and “tumble dry low”.
Low ECO Time	Low temperature. Energy-saving cycle; may require longer drying time. Stops when time ends. For delicate fabrics like polyester, viscose, poly cotton and “tumble dry low”.
Down Time	Low temperature. Set drying time based on garment type to get desired dryness. Ideal for items like duvet jackets, duvets and pillows.
Wool Time	Normal temperature. Stops before clothes are fully dry to protect fabrics. Gentle program for wool items like blankets and jackets.
Airing Time	Airing program. Airs items like bedspreads, duvets and bedding. Set drying time manually; program stops when time ends.

Coin programs

Program name	Explanation
High Time	High temperature. Set drying time manually; stops when time ends. For fabrics that handle high heat, such as denim and terry.
Medium Time	Medium temperature. Set drying time manually; stops when time ends. For fabrics that handle medium heat, such as cotton and terry.
Low Time	Low temperature. Set drying time manually; stops when time ends. For delicate and synthetic fabrics like polyester, viscose and poly cotton, and “tumble dry low”.
Airing Time	Airing program. Airs items like bedspreads, duvets and bedding. Set drying time manually; program stops when time ends.

4.2.2 Programs for lagoon

Program name	Explanation
Wool high	Wool program. For wool coats, jumpers, suit jackets and trousers. Stops automatically when the selected dryness level is reached.
Wool medium	Wool program. For wool suit jackets and skirts. Stops automatically when the selected dryness level is reached.
Silk	Delicate program. For silk and viscose dresses. Stops automatically when the selected dryness level is reached.
Synthetic mix Medium	Mixed fabrics program. For cotton suits, linen suits, raincoats and cotton blends. Stops automatically when the selected dryness level is reached.
Synthetic mix Low	Delicate program. For synthetic fur and mixed fabrics with viscose or polyester. Stops automatically when the selected dryness level is reached.
Ties	Delicate program. For ties in a net. Stops automatically when the selected dryness level is reached.
Gentle 40	Delicate program. For synthetic fur and mixed fabrics with viscose or polyester. Stops automatically when the selected dryness level is reached.

4.2.3 Options

Programs on this machine may include different options depending on the intended application and market. As requirements vary between markets, available options may differ.

Press the Information icon ⓘ next to the option icon to get more information about that option.

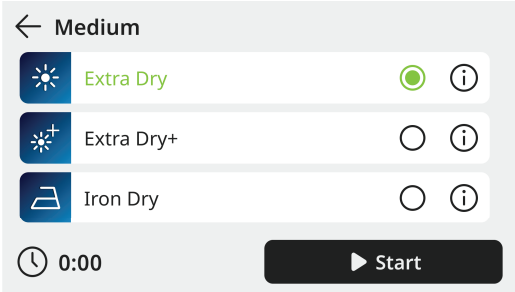

fig.X04960

Two types of options are available:

- Single-selection options: Only one option can be selected at a time.
- Multi-selection options: Two or more options can be selected at the same time.

The descriptions in below table provide brief examples of options that may be available.

Option illustration	Option name	Explanation
	Extra dry	Dries clothes to extra dry.
	Dry	Dries clothes to dry.
	Iron dry	Dries clothes to iron dry/slightly damp.
	Extra dry+	Dries clothes to extra dry, near bone dry.
	Reversing	Alternating drum direction. Improves drying and finishing (wrinkling). Reduces tangling improving wrinkling and evenness of drying, for example for large items like sheets.
	Anti crease	Drum and fan run intermittently after drying to keep clothes moving. Prevents wrinkles by avoiding piling. Keeps garments less wrinkled if not removed immediately.
	Reversing + Anti crease	Combination of: • Reversing, alternating drum direction. Improves drying and finishing (wrinkling). Reduces tangling improving wrinkling and evenness of drying, for example for large items like sheets. • Anti Crease, drum and fan run intermittently after drying finished to keep clothes moving. Helps prevent wrinkles by preventing clothes from clumping together if not removed immediately.

Tap on the start button to start the program.

During program run it is possible to pause, stop and rapid advance if allowed according to the settings.

4.2.4 Coin operated machines

Select program.

Insert correct amount of coins. Tap the start button to start the machine.

After start it is possible to add time for the selected program. Insert more coins to add time.

4.3 When program has ended

Note!

For the best possible drying result it is important to empty the machine as soon as the program has ended.

If the machine is not emptied as soon as the program has ended the drum will rotate in short intervals in order to keep the goods from being wrinkled.

4.3.1 Clean the filter

The filter must be cleaned after each drying cycle.

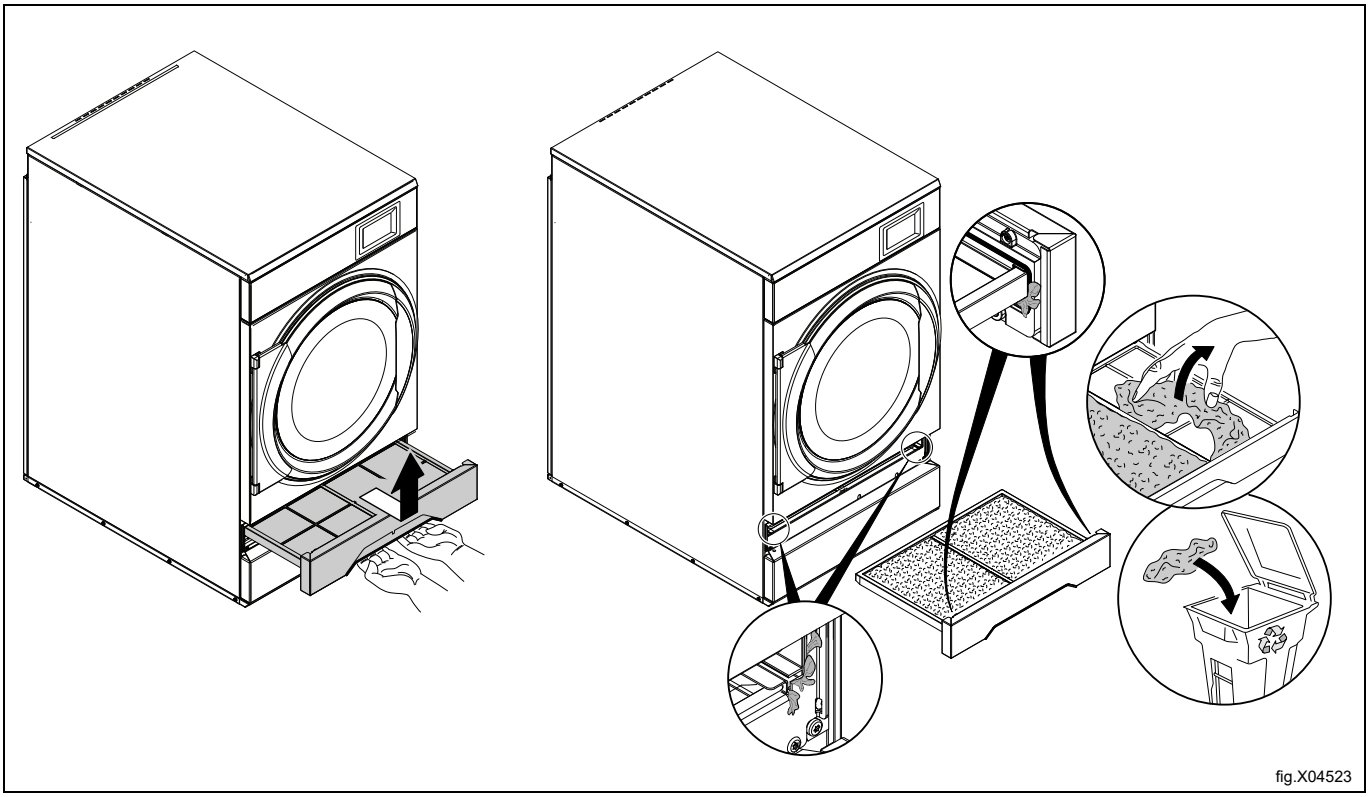

4.3.2 Clean the second filter — Only for machines with heat pump

Remove the filter drawer and pull out the second lint filter.
Clean the second lint filter.

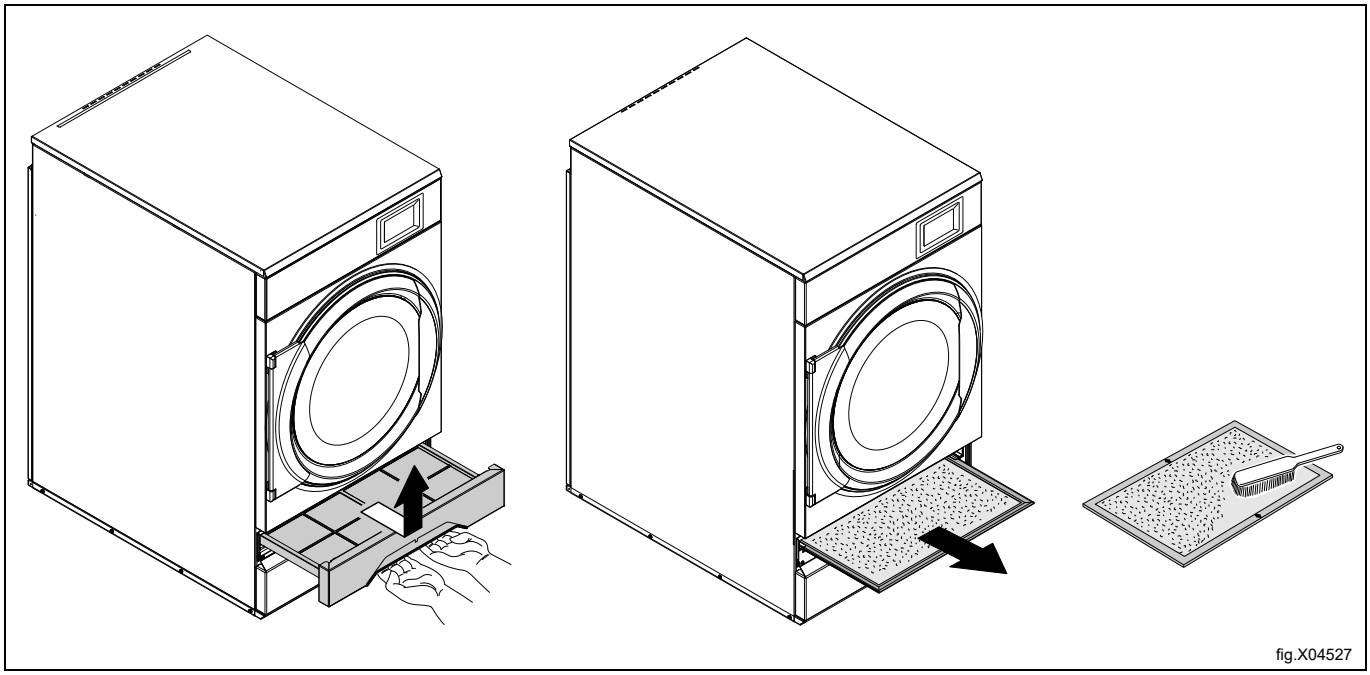
fig.X04527

When the second lint filter has been cleaned, insert the second lint filter and the filter drawer.

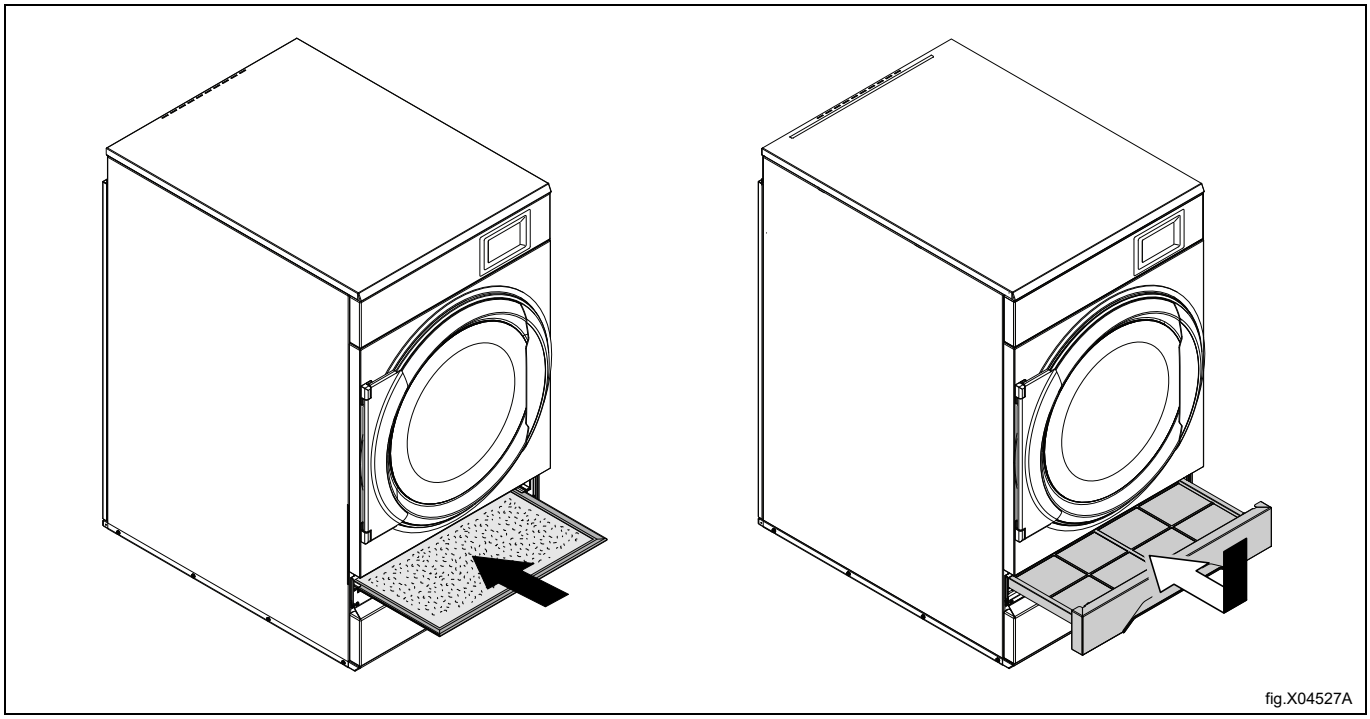
fig.X04527A

Note!
Leave the door open when ready. This is to prevent that moisture stays in the machine and develop bacteria and mould.

5 Error codes

A fault in the program or in the machine is indicated by an error code on the screen.
Some of these error codes can be solved easily without contacting service personnel.

Error code	Text	Cause/Action
12:11	Drying / Drying error with RMC program	The RMC system (Residual moisture system) in the machine indicates that the garment is not dry enough within the maximum drying time. Check that the machine is not overloaded. Check the parameter setting for max. drying time. Check for blown fuses in mains power supply or that steam or gas supply is sufficient and valve is open.
12:17	Airflow / Airflow obstructed, contact responsible	Machine indicates that internal filters are clogged and must be cleaned. Contact the responsible/owner of the machine to clean the internal filters according to the Maintenance manual. Restart the machine to clear the error message.
12:18	Airflow / Redistribution of load needed	Machine indicates that load is blocking the airflow. Redistribute the load. Restart the machine to clear error message.
20:1	Motor / Overheat drum motor	Machine indicates that drum motor is overheated. Wait 30 minutes to allow the motor to cool. Press the start button to clear error message.
30:1	Motor / Overheat fan motor	Machine indicates that the fan motor is overheated. Wait 30 minutes to allow the motor to cool. The machine will restart automatically when the temperature on the motor is OK (if the door has not been opened).

For other error codes or repeated error codes, disconnect the power for 30 seconds. If the error code keeps coming back, contact authorized service personnel.

6 Maintenance

6.1 General

It is the responsibility of the owner of the machine/the laundry manager to make sure that maintenance is periodically performed.

Note!

Lack of maintenance may deteriorate the performance of the machine and may cause damage to components.

6.2 Time for maintenance

When the display shows a message that it is time for maintenance, contact the owner of the machine/the laundry manager to perform maintenance (if available, a telephone number and/or a tag will also be displayed).

The machine can be used meanwhile. However, the message will keep coming back until the service is performed.

The message will disappear after about 30 seconds.

6.3 Every day

Check that the machine does not operate with the door or the filter drawer open, if so, the machine must be placed out of order until repairs are made.

Note!

Contact qualified service personnel to disconnect power from the affected machine.

Clean the door, door glass, door gasket and other external parts.

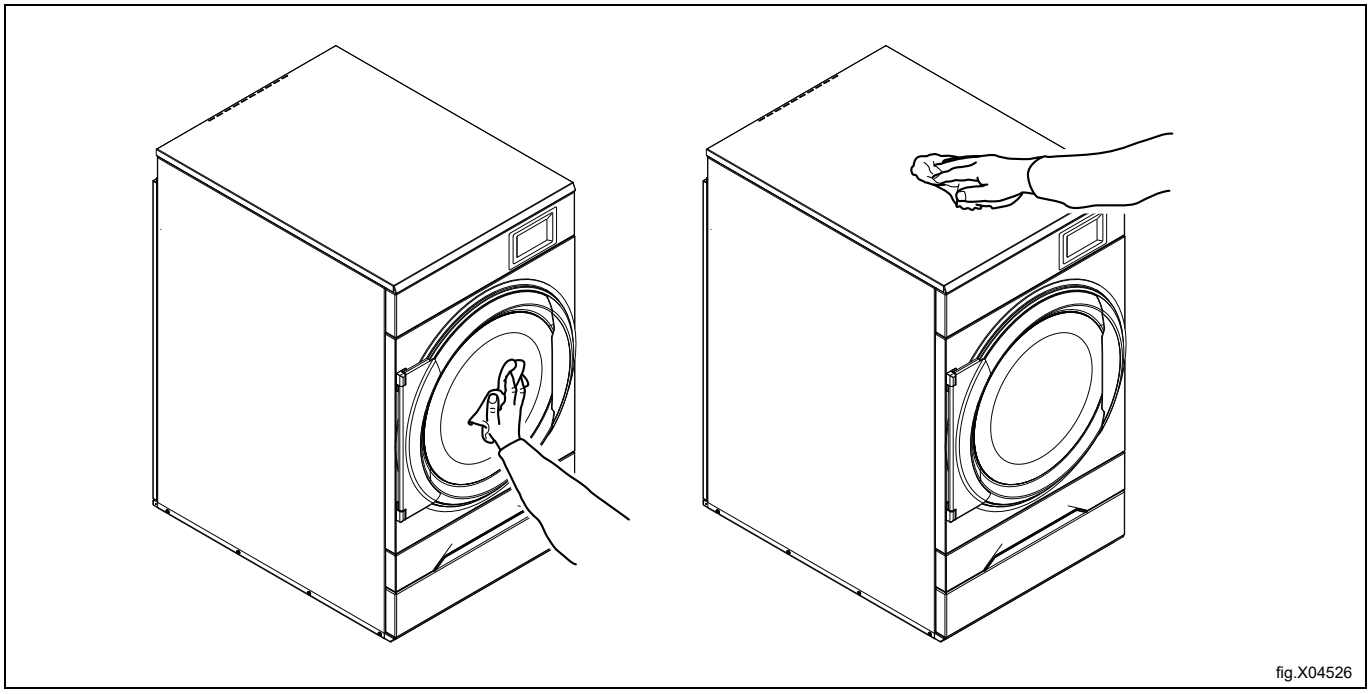

fig.X04526

Check the filter and filter drawer. Clean if necessary.

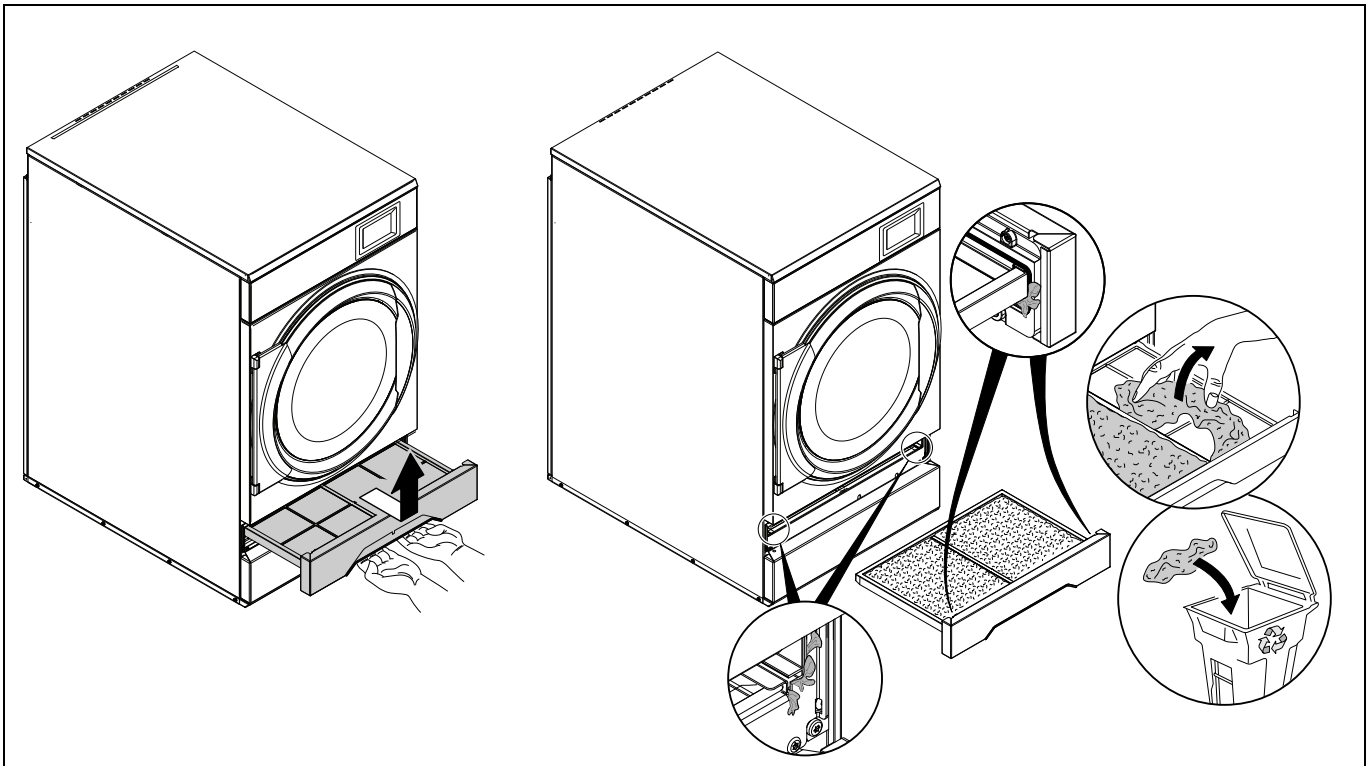

fig.X04523

Remove any lint and dust around the machine.

✓	Correct use For all surfaces	Use mild cleaning agents, follow daily cleaning schedules, wipe with soft cloths and rinse thoroughly.
✗	Incorrect use For painted surfaces	**Do not use** polishing agents, abrasive cleaners, bleach or acid descalers.
✗	Incorrect use For stainless steel surfaces	**Do not use** chlorine bleach, muriatic acid, steel wool, wire brushes or strong clorides.

6.4 Machines with moisture measurement (RMC)

At regular basis, wipe off/clean drum and lifters with citric acid (Acidum citricum). If soap/softener residue remains, it is recommended also to use a coarse sponge.

6.5 Machines with heat pump

6.5.1 Second lint filter

- If a warning message about cleaning the filter appears on the display; follow the instructions on the display and clean the first and second filter.
- If the first and second filter has been cleaned but the warning message remain on the next drying cycle, the special filter must be cleaned or replaced. Contact the owner of the machine/the laundry manager to clean or replace the special filter.

6.5.1.1 To clean the second filter

Remove the filter drawer and pull out the second lint filter.

Clean the second lint filter.

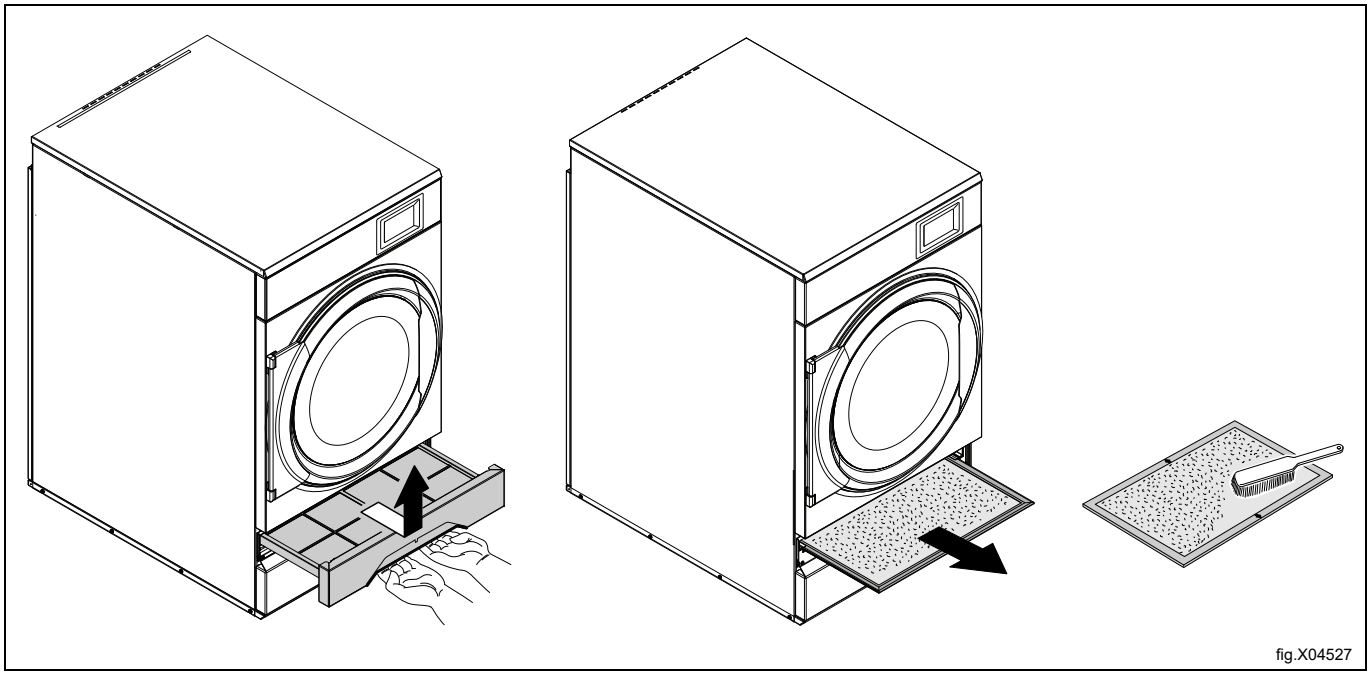
fig.X04527

When the second lint filter has been cleaned, insert the second lint filter and the filter drawer.

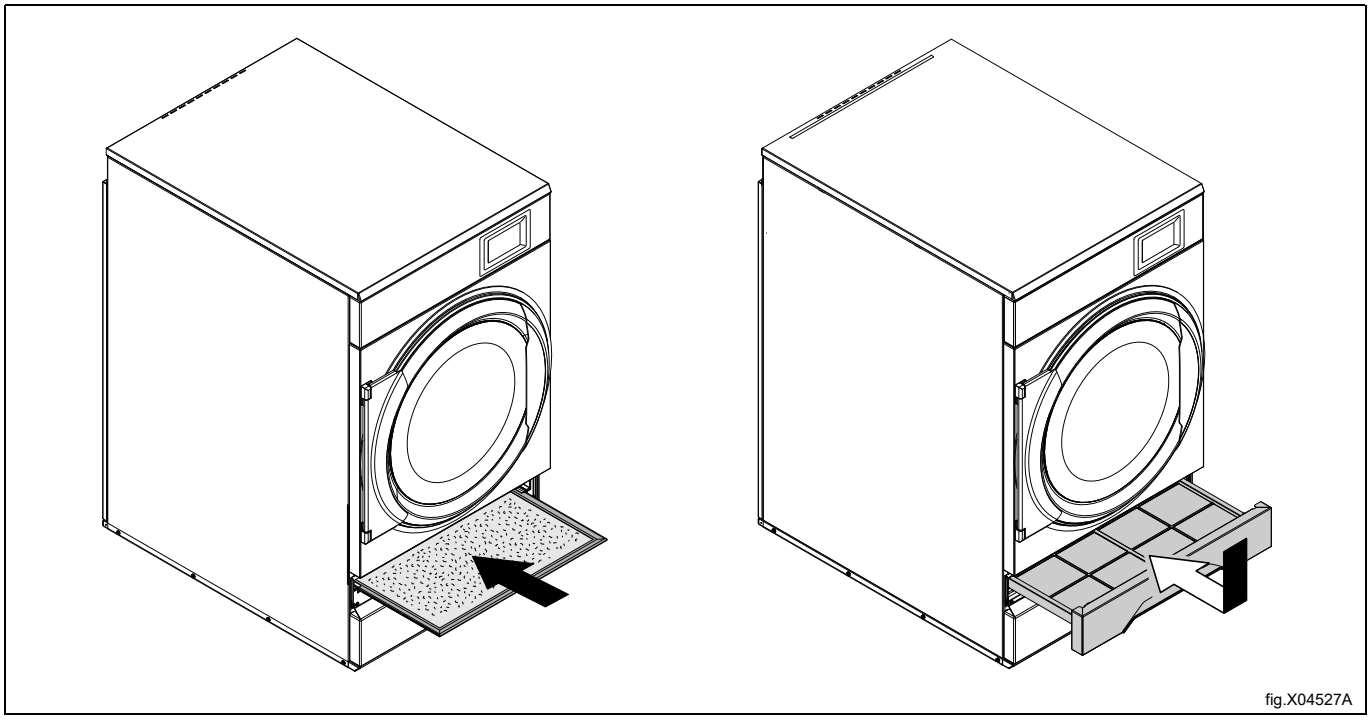
fig.X04527A

7 Disposal information

7.1 Appliance recyclability and disposal

7.1.1 Recyclability

Our appliances are manufactured using a significant percentage of recyclable metals (such as stainless steel, iron, aluminium, galvanized sheet, copper, etc.), which can be recovered through the local recycling systems, in compliance with the regulations in force in the country of use.

National regulations regarding waste disposal may vary. Disposal of the appliance must therefore be carried out in accordance with the applicable legislation and the directives issued by the competent authorities in the country where the appliance is decommissioned.

The components of the appliance must be separated and disposed of in accordance with their material composition (e.g. metals, oils, greases, plastics, rubber, refrigerant gases, insulating boards and other insulating material, glass wool, LEDs, etc.) and in full compliance with applicable local and international waste management regulations.

Compressors may contain oils and refrigerants fluids - are special waste and has to be recycled on local bases regulations.

7.1.2 Procedure regarding appliance disposal and component / material recovery

This product should not simply be disposed of in the environment at the end of its life cycle; it is imperative instead either to dispose of it in accordance with local environmental regulations, or, preferably, to deliver it whole to an authorized recycling center.

All removed components, including doors and other structural parts, must be delivered together with the appliance to an authorized recycling or dismantling facility.

The dismantling/recycling center will apply state of the art technologies and methods available to them to effectively disassemble the products for best recyclability.

Note that printed circuit boards, electrical motors or other components identified in European Union legislation to be of high critical raw materials recovery potential need to be addressed specifically.

In case of doubts or questions, always refer to your reference customer care service.

Before disposing of the appliance, carefully inspect its physical condition and preservation state, checking for potential leaks of liquids or gases, as well as for broken parts that may pose hazards during handling and subsequent dismantling.

	The symbol on the product indicates that this product should not be treated as domestic waste, but must be correctly disposed of in order to prevent any negative consequences for the environment and human health. For further information on the recycling of this product, contact the local dealer or agent, the customer care service or the local body responsible for waste disposal.

Note!
When dismantling the appliance, any marking, this manual and other documents concerning the appliance must be destroyed.

7.2 Disposal of packing

The packing must be disposed of in compliance with the current regulations in the country where the appliance is used. All the packing materials are environmentally friendly.

They can be safely kept, recycled or burned in an appropriate waste incineration plant. Recyclable plastic parts are marked as following examples.

PE	Polyethylene: • Outer wrapping • Instructions bag
PP	Polypropylene: • Straps
PS	Polystyrene foam: • Corner protectors

Electrolux Professional AB
341 80 Ljungby, Sweden
www.electroluxprofessional.com